Customer Information Sheet

DRAWING No.: M80-4T10605FH-02-PF1-02-PF1	IF IN DOUBT - ASK	©	NOT TO SCALE	THIRD ANGLE PROJECTION	ALL DIMENSIONS IN mm

SPECIFICATIONS:

MATERIAL:
- MOULDING: GLASS FILLED PPS, UL94V-0, BLACK
- SIGNAL CONTACT:
  - CLIP = BERYLIUM COPPER
  - SHELL = COPPER ALLOY
- POWER CONTACT: COPPER ALLOY
- JACKSCREW, NUT: STAINLESS STEEL

FINISH:
- SIGNAL CONTACT:
  - CLIP = 0.3µm GOLD OVER NICKEL
  - SHELL = 0.25-0.3µm GOLD OVER NICKEL
- POWER CONTACT: 0.76µm GOLD OVER NICKEL

ELECTRICAL:
- WORKING VOLTAGE = 800V AC/DC
- VOLTAGE PROOF = 1200V AC/DC
- INSULATION RESISTANCE = 100MΩ MIN
- SIGNAL CONTACT:
  - CURRENT RATING AT 25°C = 3.0A MAX
  - CURRENT RATING AT 85°C = 2.2A MAX
  - CONTACT RESISTANCE = 25mΩ MAX
- SPECIAL CONTACT:
  - CONTACT RESISTANCE = 6mΩ MAX
  - CURRENT RATING = 40A

MECHANICAL:
- DURABILITY = 500 OPERATIONS
- SIGNAL CONTACT:
  - INSERTION FORCE = 2.0N MAX
  - WITHDRAWAL FORCE = 0.2N MIN
- POWER CONTACT:
  - INSERTION FORCE = 15N MAX
  - WITHDRAWAL FORCE = 0.5N MIN

ENVIRONMENTAL:
- TEMPERATURE RANGE = -55°C TO +125°C

PACKING:
- TUBE

FOR COMPLETE SPECIFICATION SEE COMPONENT SPECIFICATION C005XX (LATEST ISSUE)

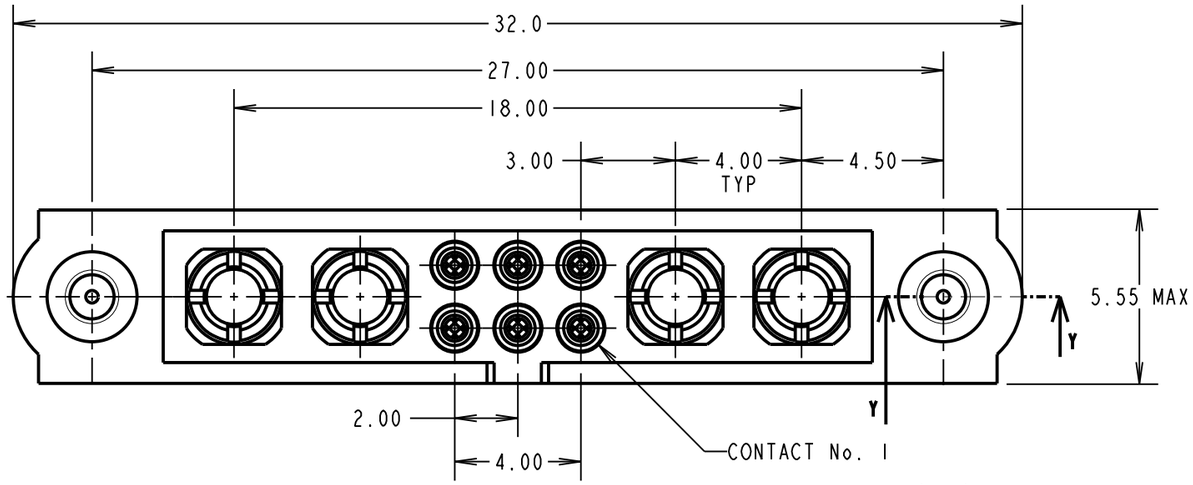

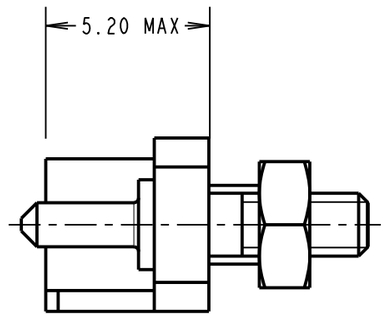

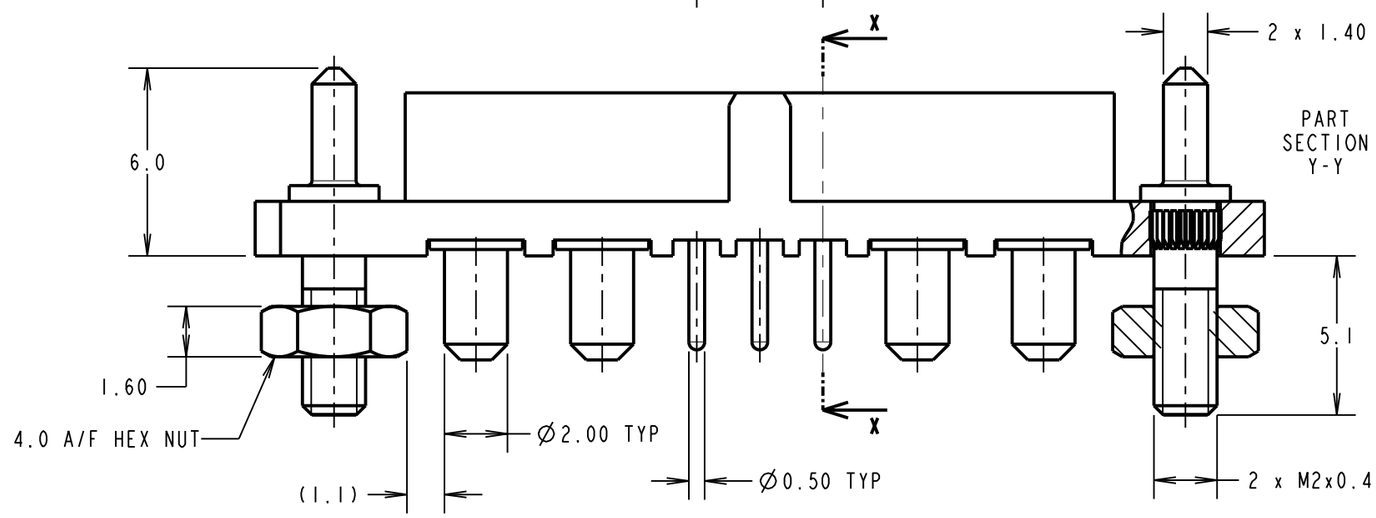

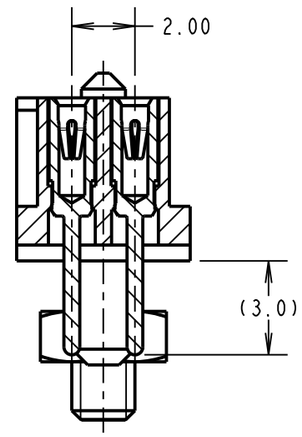

SECTION X-X

COMPLETE ASSEMBLY
FOR ILLUSTRATION ONLY

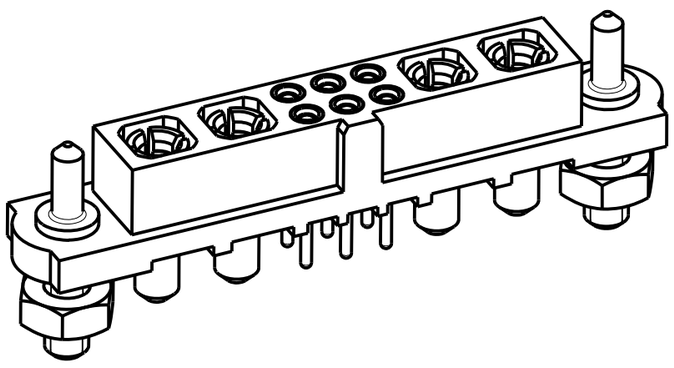

RECOMMENDED PCB LAYOUT (TOLERANCE ±0.05)

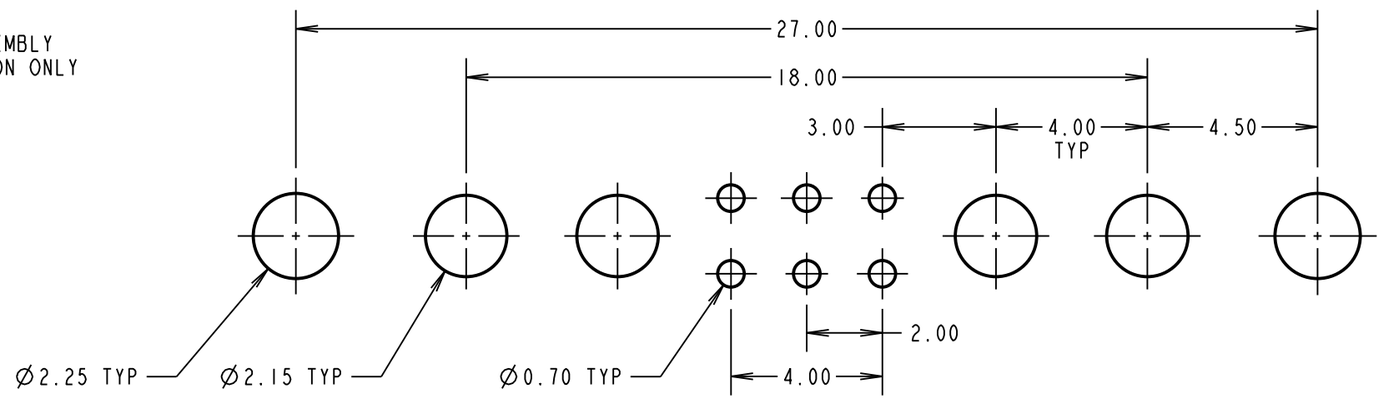

NAME	ISS.	DATE	CN/CO
MGP	1	07.01.21	----

APPROVED: MGP
CHECKED: RTP
DRAWN: M.G.PLESTED
CUSTOMER REF.:
ASSEMBLY DRG:

HARWIN
www.harwin.com
technical@harwin.com

THIS DRAWING AND ANY INFORMATION OR DESCRIPTIVE MATTER SET OUT HEREON ARE CONFIDENTIAL AND COPYRIGHT PROPERTY OF THE HARWIN GROUP AND MUST NOT BE DISCLOSED, LOANED, COPIED OR USED FOR MANUFACTURING, TENDERING OR FOR ANY OTHER PURPOSE WITHOUT THEIR WRITTEN PERMISSION.

TOLERANCES
X. = ±1mm
X.X = ±0.50mm
X.XX = ±0.20mm
X.XXX = ±0.01mm
ANGLES = ±5°
UNLESS STATED

MATERIAL: SEE ABOVE
FINISH: SEE ABOVE
S/AREA: mm²

TITLE: JACKSCREW DATAMATE MIXED TECHNOLOGY VERTICAL PC TAIL FEMALE ASSEMBLY

DRAWING NUMBER: M80-4T10605FH-02-PF1-02-PF1

SHT 2 OF 2